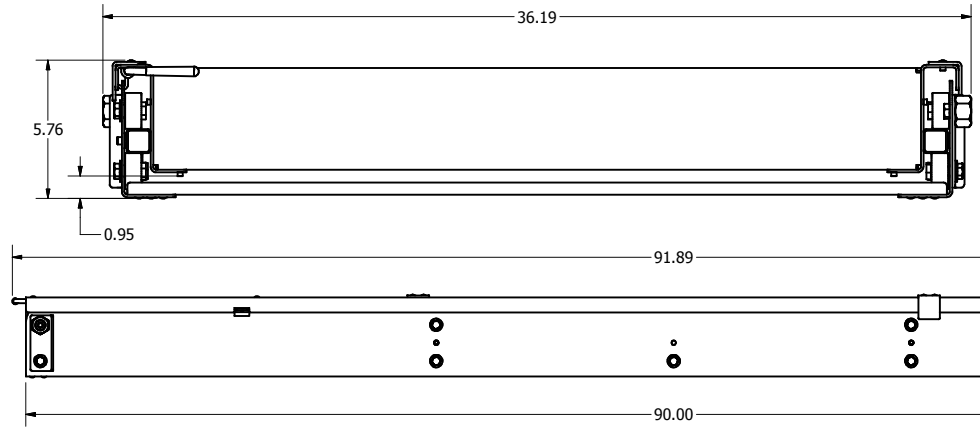

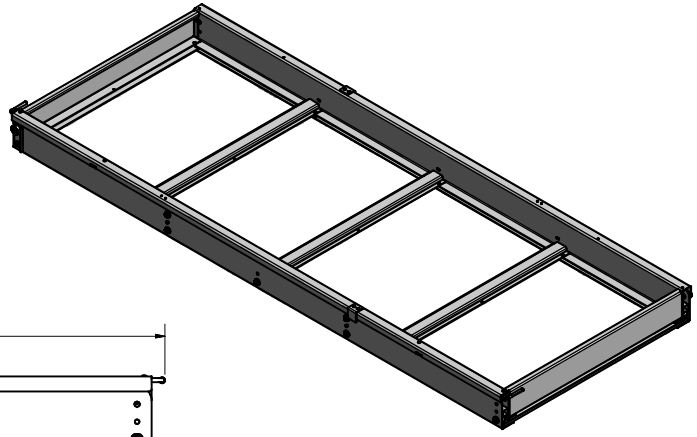

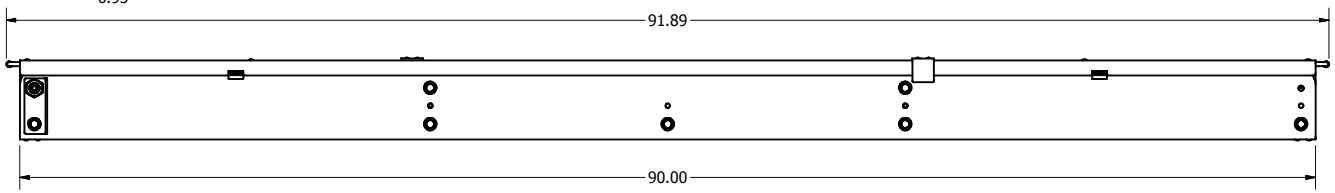

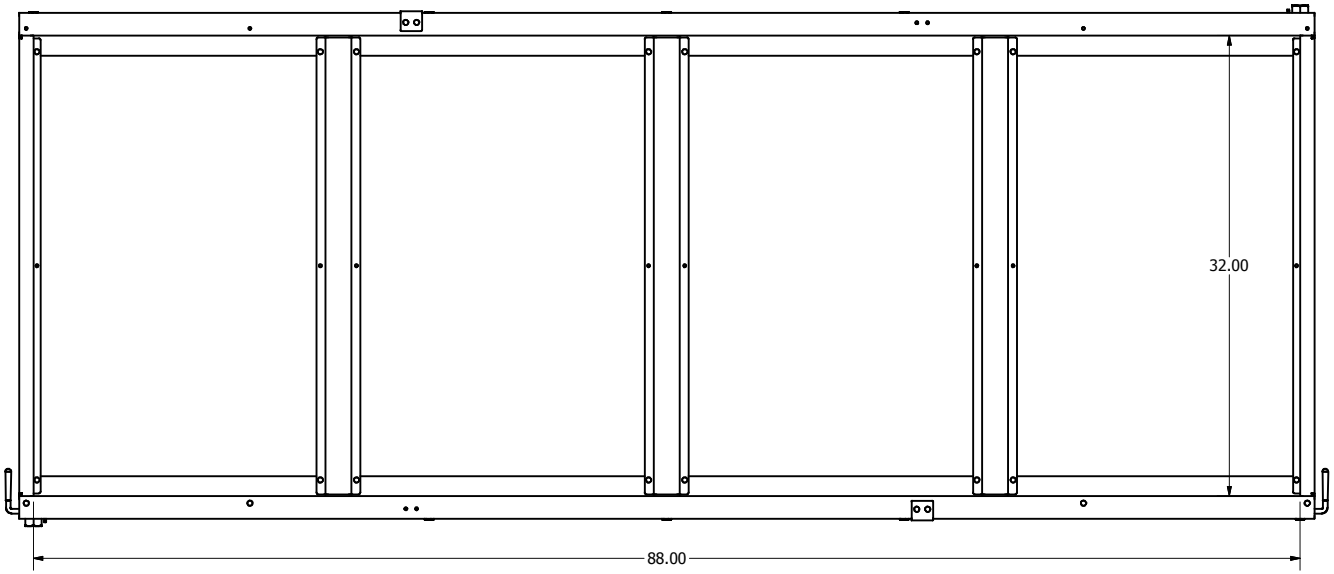

Tolerance: Bends: +/- 1/16"	
Part #: CT1-3290	DESCRIPTION: Cargo Tray
Author: mike	FLEMING SALES
Date: 9/17/07	
Material Gage: Varies	
Material Type: Varies	
Finish: Varies	
Title Version: 0.3 1-16-06	